深 圳 市 星 通 时 频 电 子 有 限 公 司
SHENZHEN SCTF ELECTRONICS CO., LTD

| | |
|---|---|
| 编号 | SCTF202305419 |
| 日期 | 2023/5/22 |
| 版本 | B01 |

RoHS compliant

# 承 认 书

## SPECIFICATION FOR APPROVAL

| | |
|---|---|
| 客户名称 Customer Name: | 立创商城 |
| 供应商物料名称 Part Name: | 石英晶体谐振器 |
| 产品描述 Description: | SMD3225 48.000MHz/10pF |
| 供应商物料料号 Part NO.: | SX3B48.000F1010F30 |
| 供应商名称 Supplier Name : | 深圳市星通时频电子有限公司 |

PLEASECONFIRMOURSPECIFICATION。敬请确认规格书之内容。

| CUSTOMER APPROVAL 客户审批 | | |
|---|---|---|
| 物料代号 PART NO. _____<br>使用于机型 USED IN MODEL: _____ | | |
| 工程部 | 品质部 | 采购部 |
| | | |

(敬请承认后返回一份，谢谢！)

| SUPPLIER APPROVAL 供应商审批 | | |
|---|---|---|
| DGN.制表人 | CKD. 校对 | APPD. 审核、签章 |
| 吴丽红 | 李俊 | 胡华才 |

地址: 深圳市南山区龙珠四路方大城T2栋10楼
Add: 10 / F, Building T2, Fangdacheng, Longzhu 4th Road, Nanshan District, Shenzhen, China.
Website: www.sctf-crystal.com Email:info@sctf-crystal.com
TEL: 0755-86097430 FAX:0755-86097259

**RoHS Compliant**

| Revision Record | | | | |
|---|---|---|---|---|
| Rev. | Revise page<br>修订页 | Revise contents<br>修订内容 | Rev. Date<br>修订日期 | Reviser<br>修订人 |
| A02 | N/A | Initial released. | 2013/1/1 | Martin.Hu |
| A03 | N/A | The version is upgraded and the content remains unchanged. | 2018/2/25 | Martin.Hu |
| B01 | Page2 | The version is upgraded and add revision record page. | 2021/2/24 | Martin.Hu |
| | | | | |
| | | | | |
| | | | | |
| | | | | |
| | | | | |
| | | | | |
| | | | | |
| | | | | |
| | | | | |
| | | | | |
| | | | | |
| | | | | |
| | | | | |
| | | | | |
| | | | | |

## ■ QUARTZ CRYSTAL UNIT SPECIFICATION

### 1. Crystal Unit Spec:

| N0. | Item | Symb. | Electrical Spec. | Notes |
|---|---|---|---|---|
| 1 | Nominal Frequency<br>标称频率 | f | 48.000000 MHz | |
| 2 | Oscillation Mode<br>振荡模式 | - | AT Fundamental | |
| 3 | Holder Type<br>封装 | - | SMD3225 | |
| 4 | Frequency Tolerance<br>常温频差 | △f/f | ±10ppm | at 25℃±2℃ |
| 5 | Drive Level<br>激励功率 | DL | 10 μW Typical | See the 2.1 |
| 6 | Load Capacitance<br>负载电容 | CL | 10pF | See the 2.2 |
| 7 | Effective Resistance<br>谐振电阻 | RR | 30Ω max. | See the 2.3 |
| 8 | Shunt Capacitance<br>静电容 | C0 | 3 pF max. | |
| 9 | Drive Level Dependency<br>激励功率依赖性 | DLD2 | 10Ω max. | Sweep from 100nW to 100uW in 20 steps. |
| 10 | Temperature Drift<br>温度频差 | f_tem | ±30ppm | Over Operating Temp. Range (Reference 25℃) |
| 11 | Spurious response<br>寄生响应 | SPDB | -3dB max. | Start -1000ppm stop 5000ppm 30 steps power applied: 10dBm |
| 12 | Operating Temperature<br>工作温度范围 | T_use | -40～85℃ | |
| 13 | Storage Temperature Range<br>存储温度 | T_sta | -55～125℃ | |
| 14 | Insulation Resistance<br>绝缘阻抗 | IR | 500 MΩ | at DC 100V |
| 15 | Aging<br>年老化率 | f_age | ±3 ppm | 1st Year |
| 16 | Measurement Condition<br>测量条件 | Measured by S&A250B or equivalen,TA=25℃±2℃，RH=40%~70% | | |

### 2. Circuit Coditions Spec:

2.1 Drive Level (DL) 100μW max.

(If Drive Level is too high,that may cause crystal resonator abnormal oscillation or damagaed the main body of quartz)

2.2 Loading Capacitance (CL) : 10pF

(The total circuit load capacitance should be equal to the crystal (CL) values, too large or too small load, will result in frequency drift.)

2.3 Negative Resistance (-R) ≥ 150Ω

(If –R more than ESR spec of 5 times will be better. If Negative Resistance is too low, that may cause crystal resonator stop oscillation or not easy to oscillate)

## ■ DIMENSIONS

Product size（产品尺寸）　　Units（单位）：mm(毫米)

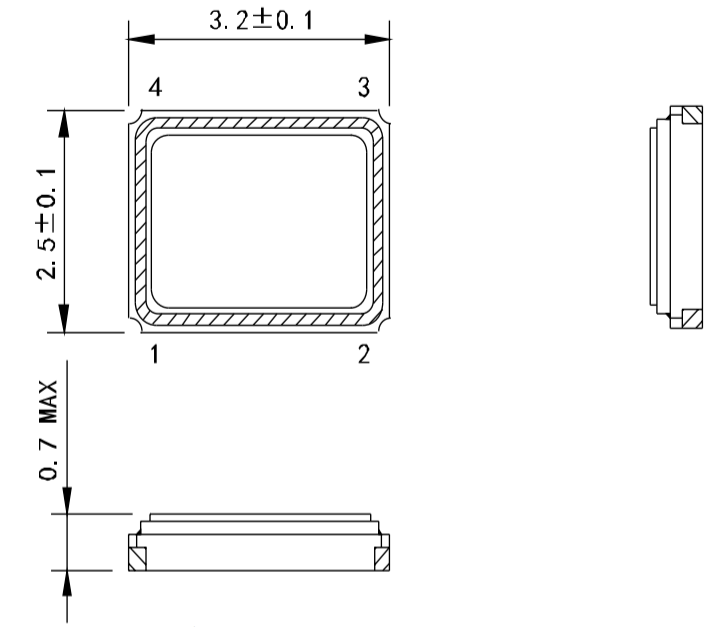


Pad size（焊盘尺寸）

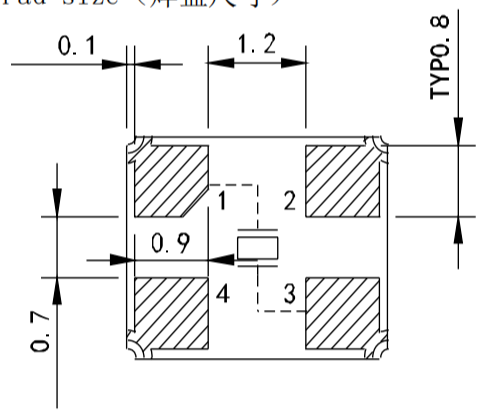


(Bottom View)
仰视图

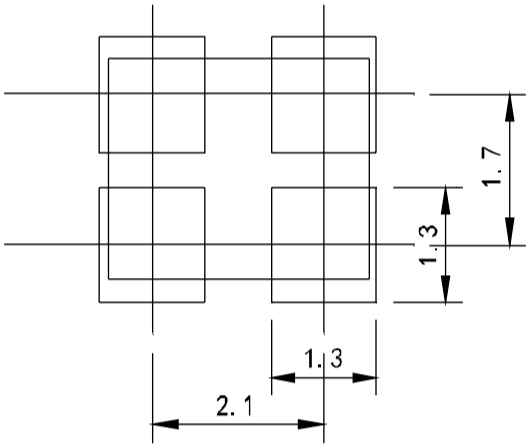


suggested solder pad layout

Note: (1) The missing pad is also correct on the 4th pin, this pin is not used as a starting position.

(2) Product pin 2 and pin 4 are connected with a cover, please connect with GND or floating.

## ■ PRODUCT STRUCTURE & MARKING

### ◆ Product Structure产品结构

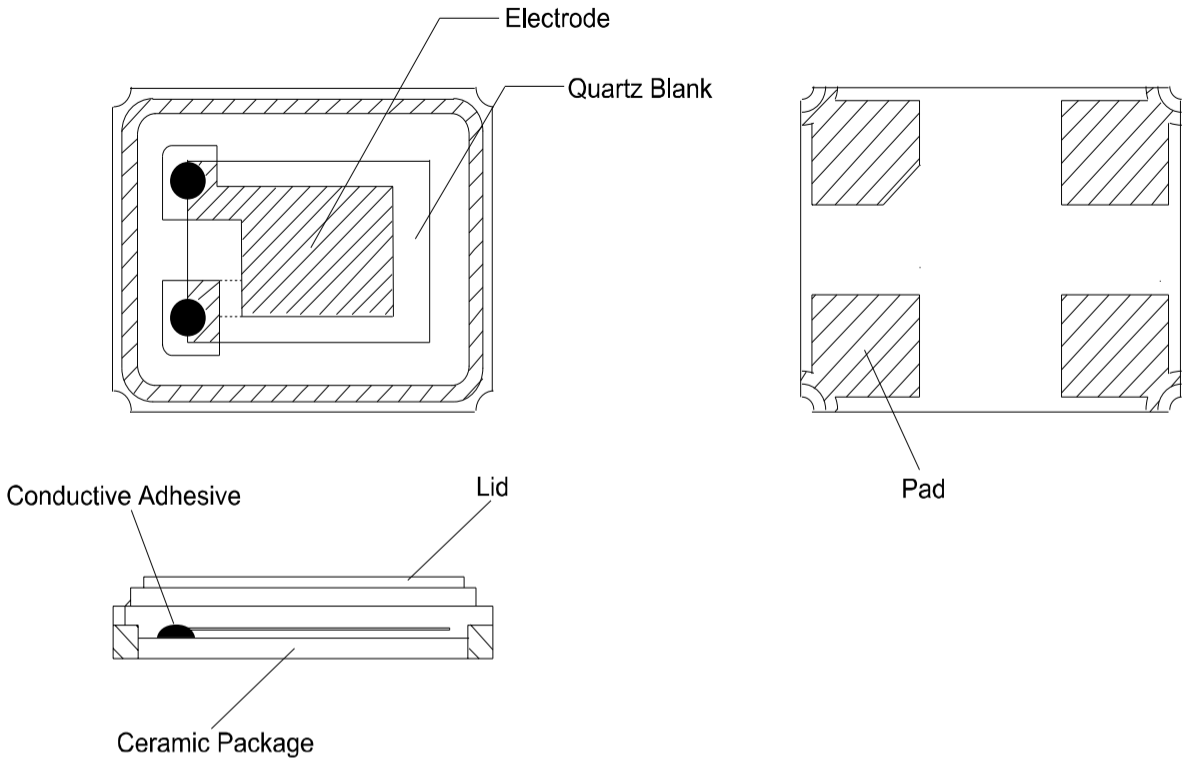


### ◆ Marking印字

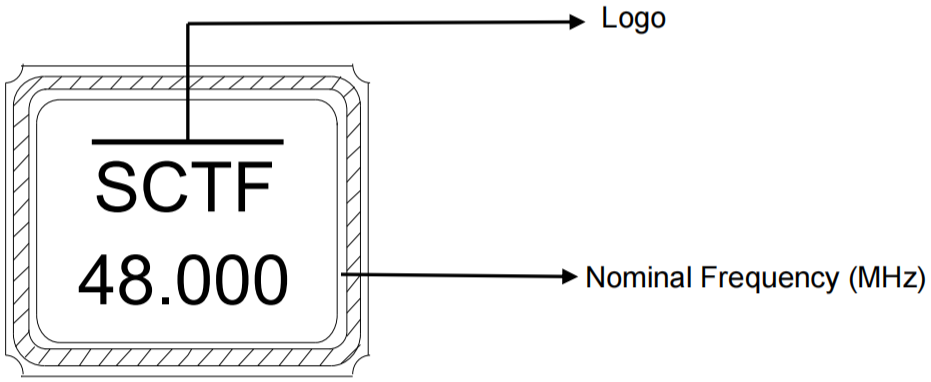

## ■ REFLOW PROFILES

| Profile Feature | Sn-Pb Eutectic Assembly | Pb-Free Assembly |
|---|---|---|
| Preheat/Soak<br>●Temperature Min(Ts min)<br>●Temperature Max (Ts max)<br>●Time (Ts min to Ts max) | <br>100 °C<br>150 °C<br>60-120 seconds | <br>150 °C<br>200 °C<br>60-120 seconds |
| Ramp-up rate ($T_L$ to Tp) | 3 °C/second max. | 3 °C/second max. |
| Time maintained above<br>●Liquidous temperature ($T_L$)<br>●Time ($t_L$) maintained above $T_L$ | <br>183 °C<br>60-150 seconds | <br>217 °C<br>60-150 seconds |
| Peak package body temperature (Tp) | 235℃ | 260℃ |
| Time within 5 °C of the specified classification temperature (Tp) | 20 seconds | 30 seconds |
| Ramp-down rate (Tp to $T_L$) | 6 °C/second max. | 6 °C/second max. |
| Time 25 °C to peak temperature | 6 minutes max. | 8 minutes max. |
| **Suggust reflow times** | **3 Times max.** | |

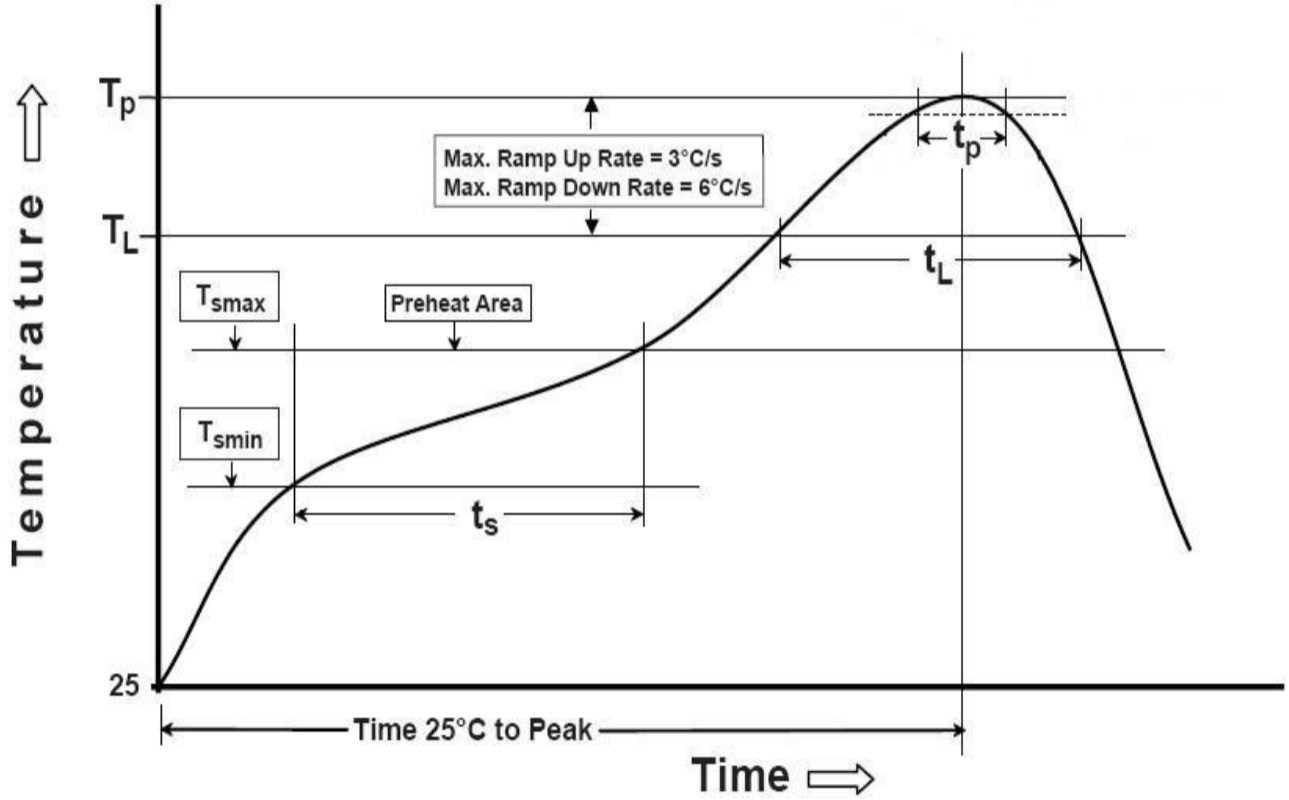

## ■ RELIABILITY SPECIFICATION

| 序号<br>NO. | 项目<br>ITEM | 条件<br>CONDITIONS | 合格标准<br>BASIS OF VERDICT |
|---|---|---|---|
| 1 | 跌落<br>DROP | 100cm高处自由跌落到3cm厚木板上,3次<br>High:100cm;Thickness:3cm;3 times. | △FL≤±5ppm<br>△RR≤RR(max)*10% |
| 2 | 振动<br>VIBRATION | 频率 Frequency:10~57.7Hz:幅度 Amplitude:±0.75mm<br>频率Frequency:57.7Hz~500Hz:加速度幅度acceleration rate:98m/s2<br>周期 Cycle time:10-500-10Hz：15min<br>振动方向 Direction:X,Y, Z<br>振动时间 Duration: 每个方向2小时 2 h/direction. | △FL≤±5ppm<br>△RR≤RR(max)*10% |
| 3 | 温度变化<br>TEMPERATURE SHOCK | -40℃±2℃（30min）←→85℃±2℃（30min）;循环10次<br>-40℃±2℃（30min）←→85℃±2℃（30min）;For 10 cycles | △FL≤±5ppm<br>△RR≤RR(max)*10% |
| 4 | 湿热<br>HUMIDITY | 温度:40℃±2℃;湿度90-95%;时间:96小时<br>Temp:40℃±2℃;Humidity:90-95%;Times:96h | △FL≤±5ppm<br>△RR≤RR(max)*10% |
| 5 | 低温<br>COLD RESISTANCE | 温度:-40℃±2℃;时间:96小时<br>Temp:-40℃±2℃;Times:96h | △FL≤±5ppm<br>△RR≤RR(max)*10% |
| 6 | 高温1<br>HEAT RESISTANCE 1 | 温度:100℃±2℃;时间:96小时<br>Temp:100℃±2℃;Times:96h | △FL≤±5ppm<br>△RR≤RR(max)*10% |
| 7 | 高温2<br>HEAT RESISTANCE 2 | 温度:155℃±2℃;时间:2小时<br>Temp:155℃±2℃;Times:2h | △FL≤±5ppm<br>△RR≤RR(max)*10% |
| 8 | 高温3<br>HEAT RESISTANCE 3 | 温度:85℃±2℃;电压:3.3V/5.0V;时间:96小时<br>Temp:85℃±2℃;Voltage:3.3V/5.0V;Times:96h | △FL≤±5ppm<br>△RR≤RR(max)*10% |
| 9 | 回流焊<br>REFLOW | 150℃±5℃保持120s后升到270℃±5℃保持10s，升温和保温时间小于200s，常温放置1～2h后测定<br>Keep 150 ℃ ± 5 ℃ 120s and then rose to 270 ℃ ± 5 ℃ for 10s, warming and holding time is less than the 200s, placed at room temperature 1 ~ 2h after test | △FL≤±5ppm<br>△RR≤RR(max)*10% |
| 10 | 盐雾<br>SALT SPRAY | 盐雾浓度:5%;温度:35℃;时间:24小时<br>Salt density:5%;Temp:35℃;Times:24h | 目测无明显腐蚀现象<br>Visual no significant corrosion. |
| 11 | 老化<br>AGING | 温度:85℃;时间:30天<br>Temp:85℃;Times:30days | △FL≤±5ppm<br>△RR≤RR(max)*10% |
| 12 | 气密性<br>LEAKAGE | 氦气(0.6~0.65MPa):10分钟<br>He(0.6~0.65MPa):10min | ≤3*10-9Pa.m3/s |
| 13 | 焊接<br>SOLDER | 温度:260℃±5℃<br>Temp:260℃±5℃ | 浸锡率大于90%<br>Soldering tin rate greater than 90% |

## ■ PACKAGE

◆ **Taping Specifications编带规格**

UNIT(单位):mm(毫米)

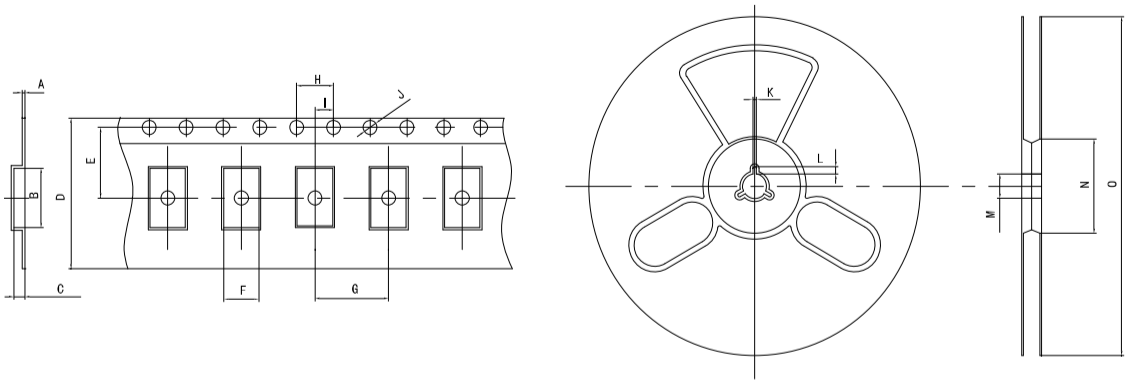


| TEYE | A | B | C | D | E | F | G | H | I | J | K | L | M | N | O |
|---|---|---|---|---|---|---|---|---|---|---|---|---|---|---|---|
| 3.2×2.5 SMD | 0.25 | 3.50 | 1.40 | 8.00 | 3.50 | 2.75 | 4.00 | 4.00 | 2.00 | 1.50 | 2.30 | 4.00 | 13.00 | 60.00 | 180.00 |

◆ **Packaging specifications包装规格**

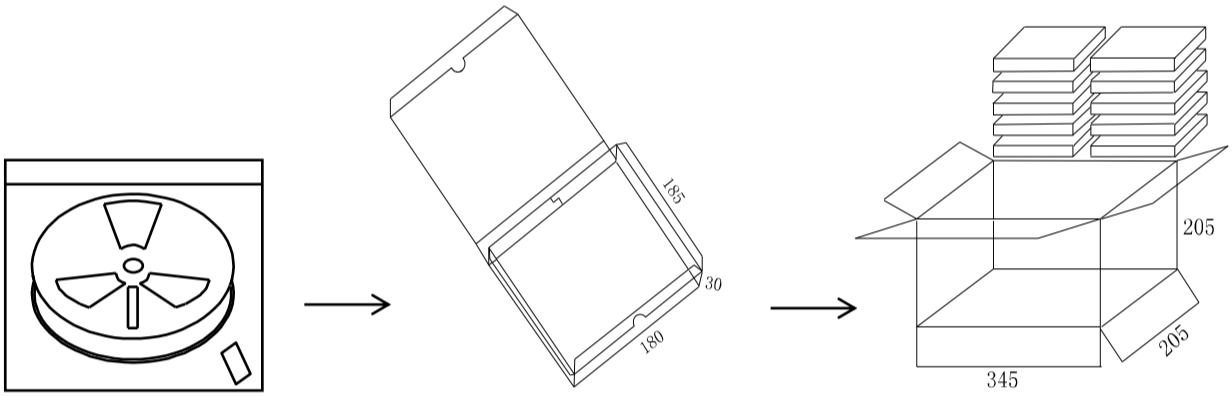


自封袋(Bag)
3000只 = 1 轮
3000pcs = 1 Reel

内包装(Inside package)
1 轮=1 盒
1 Reel=1 box

外包装(Outside Package )
10 盒=1 箱
10 box=1 carton